TS-G1030F/XIEL5 THF5795-C/VI

TS-G1030F

210 W MAX

Flush-Mount Car Speaker 10 cm COAXIAL 3-WAY

Haut-Parleurs À Montage Encastré Pour Automobile 3 VOIES COAXIAL 10 cm

Be sure to read this instruction manual before installing this speaker.

Vor dem Ein bau des Lautsprecher, verfehlen Sie nicht diese Vorschrift zu lesen.

Prière de lire obligatoirement ce manuel d'installation avant de monter les haut-parleurs.

Prima di installare l'altoparlante leggete tassativamente le istruzioni.

Antes de instalar el altavoz es importante que lea estas instrucciones.

Leia este manual de instruções antes de instalar o alto-falante.

Обязательно прочитайте это руководство перед подключением динамика.

●HOW TO INSTALL ●EINBAU ●MODE D'INSTALLATION ●MODO DI INSTALLAZIONE ●INSTALACION ●COMO INSTALAR ●КАК ПОДКЛЮЧИТЬ

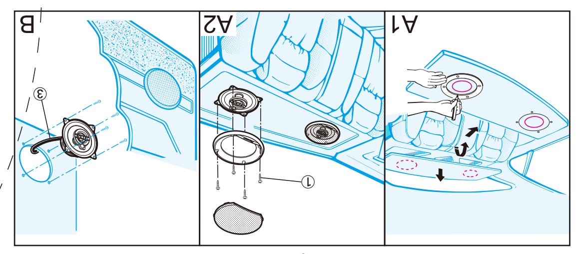

●DIMENSIONS ●GRÖßE ●DIMENSIONS ●DIMENSIONE ●DIMENSIONES ●DIMENSÃO ●РАЗМЕР

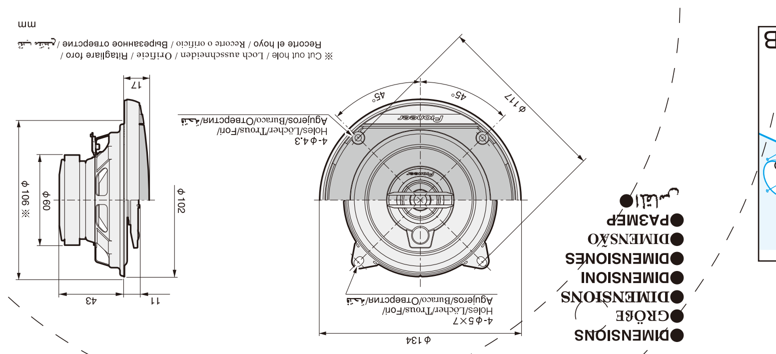

●CHARACTERISTIC ●MERKMALE ●CARACTÉRISTIQUE ●CARATTERISTICHE ●CARACTERISTICA ●CARACTERÍSTICA ●ХАРАКТЕРИСТИКИ

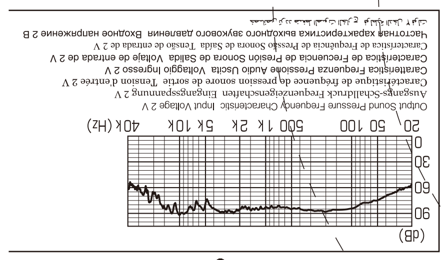

●PARTS INCLUDED ●MIT GELIEFERTES ZUBEHÖR ●PIECES COMPRISES ●PEZZI INCLUSI ●PIEZAS INCLUIDAS ●PEÇAS INCLUÍDAS ●КОМПЛЕКТАЦИЯ

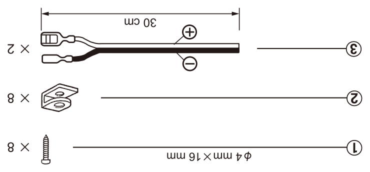

●SPECIFICATIONS
- Reproduction system: Coaxial three way
- Speaker specifications
- Woofer: ϕ102 mm, Magnet: 110 g
- Midrange: ϕ30 mm Balanced dome
- Tweeter: ϕ10 mm Dome
- Nominal impedance: 4 Ω
- Sensitivity: 87 dB (±1.5 dB)
- Frequency response: 35 Hz to 27 kHz (−20 dB)
- Maximum music power: 210 W
- Nominal power: 30 W
- Grille material: Steel net, heat-proof resin
- Weight (per speaker including accessory parts): 0.35 kg
- Gross weight (2 speakers including packaging): 0.83 kg

© PIONEER CORPORATION 2017 28-8, Honkomagome 2-chome, Bunkyo-ku, Tokyo 113-0021, JAPAN / JAPON MADE IN VIETNAM FABRIQUÉ AU VIÊT-NAM FABBRICATO IN VIETNAM FEITO NO VIETNÃ СДЕЛАНО В ВЬЕТНАМЕ

PIONEER EUROPE NV Haven 1087, keetberglaan 1, B-9120 Melsele, Belgium / Belgio / Belgique

Pioneer

TS-G1030F

HP 3 VOIES

INJECTION MOLDED CONE

- PUISSANCE MUSICALE MAXIMUM 210 W
- PUISSANCE NOMINALE 30 W
- HP GRAVE Ø100 mm •HP MÉDIUM Ø30 mm DÔME ÉQUILIBRÉ
- HP AIGU Ø10 mm DÔME
- IMPÉDANCE 4 OHMS •SENSIBILITÉ 87 dB (±1,5 dB)
- BANDE PASSANTE 35 Hz À 27 kHz (−20 dB)
- POIDS BRUT 0,83 kg

Wide Application

Ces produits ont été conçus pour reproduire un son de qualité et pour s'installer dans un grand nombre de véhicules.

- Membrane renforcée Mica IMPP
- Suspension caoutchouc haute performance
- Bobine haute résistance

Pioneer

210 W MAX

10 cm / 4"

Wide Application

TS-G1030F

3-WAY SPEAKER / HP 3 VOIES
DIFFUSORE 3 VIE / ALTO-FALANTE 3 VIAS
3-ПОЛОСНЫЙ ДИНАМИК

INJECTION MOLDED CONE™

TS-G1030F
HP 3 VOIES
INJECTION MOLDED CONE
Pioneer

XIEL5
1 PAIR / PAIRE

8 849383 73383 8

PIONEER CORPORATION

TS-G1030F
3-WAY SPEAKER
3-ПОЛОСНЫЙ ДИНАМИК
INJECTION MOLDED CONE
Pioneer

THF5795-C/VI

TS-G1030F

INJECTION MOLDED CONE

3-WAY SPEAKER

- MAX. MUSIC POWER 210 W
- NOMINAL POWER 30 W
- WOOFER Ø100 mm •MIDRANGE Ø30 mm BALANCED DOME
- TWEETER Ø10 mm DOME
- IMPEDANCE 4 OHMS •SENSITIVITY 87 dB (±1.5 dB)
- FREQUENCY RESPONSE 35 Hz TO 27 kHz (−20 dB)
- GROSS WEIGHT 0.83 kg

Pioneer

Wide Application

These products are designed to produce high quality sound and easily fit into a variety of vehicles.

- Mica Reinforced IMPP Cone
- High Compliance Rubber Coated Cloth Surround
- Heat Resistant Voice Coil

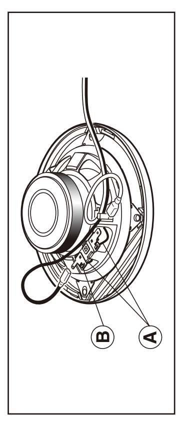

- Do not fail to read the instructions on the flap to the opposite side.
- Lesen Sie unbedingt die Anweisungen auf Klappe zur gegenüberliegenden Seite.
- Ne manquez pas de lire les instructions sur le volet sur le côté opposé.
- Non mancare di leggere le istruzioni sul lembo sul lato opposto.
- Asegúrese de leer las instrucciones sobre la solapa al lado opuesto.
- Não deixe de ler as instruções mencionadas na aba do lado oposto.
- Обязательно прочитайте инструкцию на внутренней створке упаковки.

If you want to dispose this product, do not mix it with general household waste. There is a separate collection system for used electronic products in accordance with legislation that requires proper treatment, recovery and recycling.

Private households in the member states of the EU, in Switzerland and Norway may return their used electronic products free of charge to designated collection facilities or to a retailer (if you purchase a similar new one).

For countries not mentioned above, please contact your local authorities for the correct method of disposal.

By doing so you will ensure that your disposed product undergoes the necessary treatment, recovery and recycling and thus prevent potential negative effects on the environment and human health.